THELIA

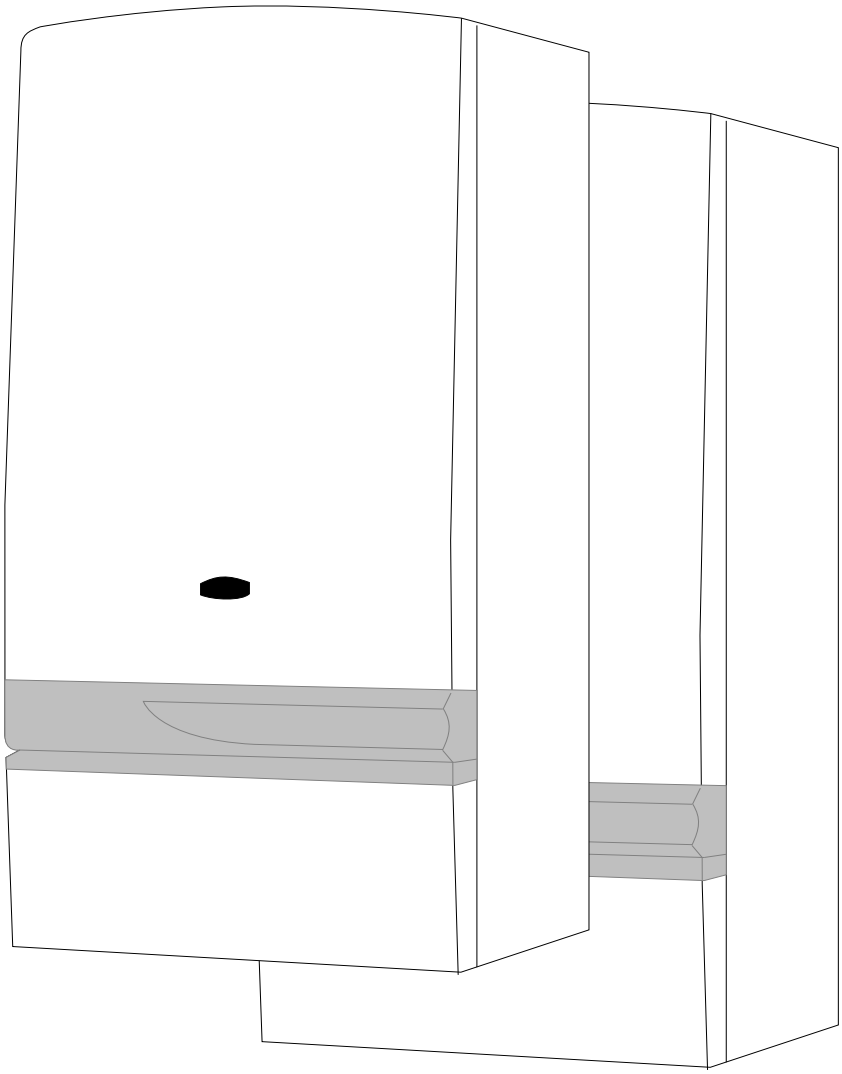

THIS IS A CAT II2H3+ APPLIANCE

IN WARRANTY
TECHNICAL HELPLINE
01773 828400

HEAT CALL
01773 828100

spares & parts online
IBASIS.co.uk©

Saunier Duval

THELIA 23, THELIA 23 E, THELIA SB 23

Note!
The boiler serial number is marked on the label attached to the inside of the door. Refer to the "Introduction" section page 3 for a description of the basic functions of the boiler. The "Users" section describes how to safely operate the boiler.

USERS SECTION

Introduction ..... Page 3
Commisioning 3
Controls & lighting 4
Operation - Checks 5
Clock - instructions for use ..... 6 - 8
Draining 9
Servicing/maintenance 9

INSTALLATION SECTION

Introduction ..... Page 3
Technical data ..... 10 - 11
Dimensions 11
Boiler schematic ..... 12 - 13
Connection plate 14
Piping system installation 15
Heating system design 15
Hot water system design 16
Boiler location ..... 16 - 17
Boiler installation 18
Flue installation ..... 18 - 23
Electrical connection ..... 24 - 25
Commissioning ..... 26 - 27
Operating safety devices 28
Settings ..... 28 - 29
Changing gas type 29

Mandatory warning notice for CEE countries
WARNING, *this appliance was designed, approved and inspected to meet the requirements of the English market. The identification plate located on the inside of the appliance* ***certifies the origin*** *where the product was manufactured and the* ***country*** *for which it is intended.*
If you see any exception to this rule, please contact your nearest ***Saunier Duval*** *dealer.*
Thank you in advance for you assistance.

INTRODUCTION

The **Thelia 23** and **Thelia 23E** range of boilers are wall mounted combination boilers providing central heating and instantaneous domestic hot water.

The **Thelia SB23** boiler is a wall mounted boiler providing central heating only. This boiler can be used in combination with a hot water tank to supply domestic hot water.

The boilers are of the II2H3+ Gas Category for use with natural gas (G20) as distributed in the United Kingdom or with butane or propane gas (G30/31).

These instructions should be carefully followed for the safe and economical use of your boiler.

Once the pilot has been lit (Thelia 23 and Thelia SB23 only) the boiler is automatic in operation.

The boilers have a fan assisted balanced flue which both discharge the products of combustion to and draws the combustion air from the outside air.
The boiler is supplied for rear outlet flue connection. Alternatively, the boiler is designed to allow the flue system to be connected to the top of the boiler, top outlet flue connection. Refer to the flue fitting instructions.

The boilers can be installed on either an external wall or on an adjacent inside wall, that is, the flue system will pass directly to the rear or to either side to the terminal fitted on the outside wall face.

Ancillary equipment
A range of accessories are available including, vertical flue coponents, bends ....
For further information contact your supplier.

Boilers burning LPG or similar gas MUST NOT be fitted in basements or below ground level.

COMMISSIONING

Gas Safety (Installation and Use) Regulations
In your interests and that of gas safety, it is the law that ALL gas appliances are installed and serviced by a competent person in accordance with the above regulations.

Gas leak or fault
If a gas leak or fault exists or is suspected, turn the boiler off and consult the local gas undertaking or your installation/servicing company.

Boiler controls
The control panel, located at the lower front of the boiler casing allows the boiler to be started, shut down, controlled and monitored during use, see diagram 2 (Thelia 23 and Thelia 23E) or diagram 3 (Thelia SB23).

Flue
Do not obstruct the outside terminal of the boiler. Note. At stand-by, the boiler fan will run at low speed, this is quite normal.

Starting the boiler
Before starting the boiler check that:
- The gas meter tap is open. If using butane or propane, check that valve on storage cylinder or tank is open.
- The boiler gas service cock is open.
- The boiler is connected to the electrical supply and switched on.
- The selector lever is in the left hand position.

Lighting the THELIA 23 and THELIA SB 23 boilers

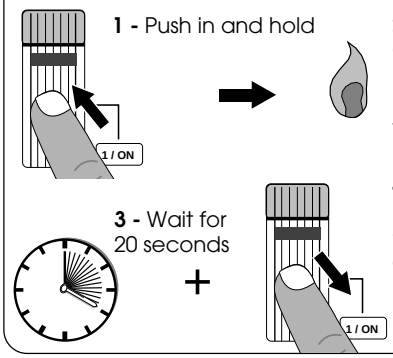

1 - Push in and hold

2 - The pilot lights. Check that pilot is alight by looking through the viewing window.

3 - Wait for 20 seconds

+

4 - Release : the pilot must remain ON, if the pilot does not remain lit, repeat the previous steps.

Note : On pressing the 'ON' button, the fan will be heard to run at full speed after which the ignition sequence will start and the pilot will light.
Should the pilot fail to remain alight or go out for any reason, intentionally or unintentionally, always wait at least 3 minutes before trying to relight.

Lighting the THELIA 23 E boiler

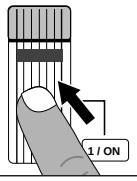

Push in and release

Hab 130

Diagram. 1
OPENING THE CONTROL PANEL COVER

The control panel, located at the lower front of the boiler casing **diag. 1** allows the boiler to be started, shut down, controlled and monitored during use.

Control panel description (diag. 2 and 3) :

1 - "ON" push - button.
2 - "OFF" push - button.
4 - Boiler thermostat.
5 - Temperature gauge.
6 - Pressure gauge.
7 - Summer - Winter lever (THELIA 23, THELIA 23 E). Summer - Winter switch (THELIA SB 23).
30 - Domestic hot water temperature adjustment.

Diagram. 2
BOILER CONTROL PANEL THELIA 23, THELIA 23 E

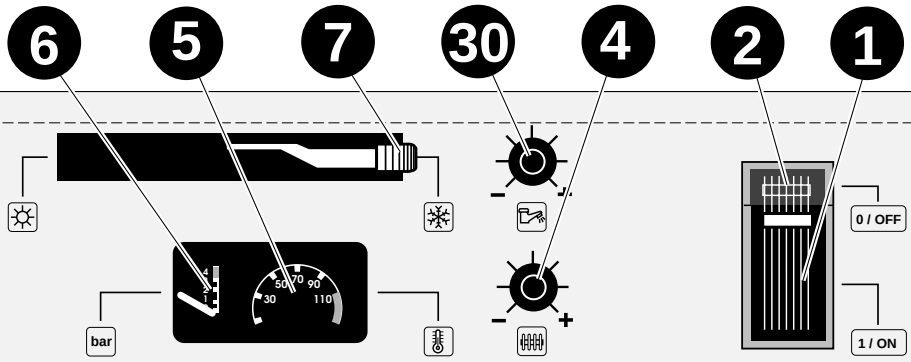

Diagram. 3
BOILER CONTROL PANEL THELIA SB 23

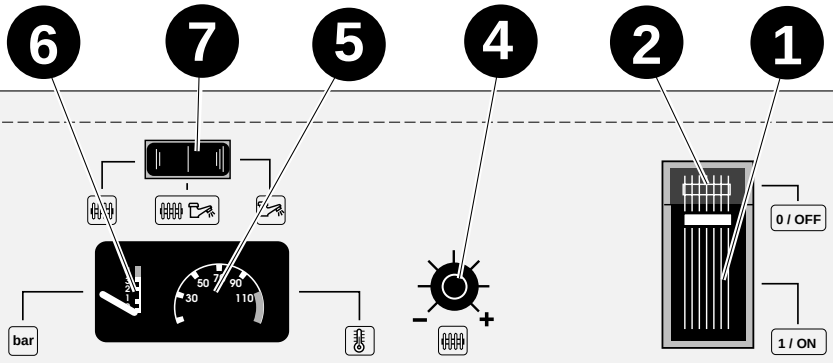

OPERATION - CHECKS

THELIA 23, THELIA 23 E

HEATING + HOT WATER

• Place the selector lever (**diagram. 4**) to position (winter). In this position the domestic hot water will have PRIORITY.

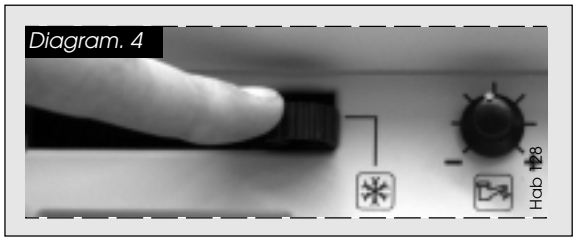

• **Hot water** : Turn the knob (**diagram. 5**) in order to obtain a water temperature suited to the demand.

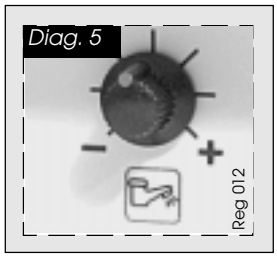

• **Heating** : turn the knob (**diagram. 6**) in order to obtain a water temperature suited to the demand, and adjust the room thermostat to the desired temperature.

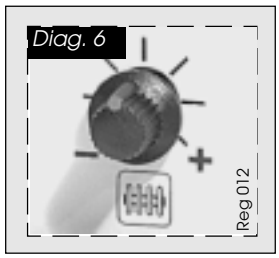

Note : If you are out for a few days, set the button (**diagram. 6**) to the minimum value in order to protect the boiler from frost. In case of prolonged absence, refer to "**Draining**" section page **9**.

HOT WATER ONLY

• Place the selector lever (**diagram. 4**) to position (**summer**).
Heating is switched OFF. The boiler will provide hot water only. Turn the knob (**diagram. 5**) in order to obtain a water temperature suited to the demand.

STOPPING THE BOILER

• Press the (**O/OFF**) push-button (**diagram. 7**) : this will close OFF the gas supply valve. Electrical power supply to the boiler will be automatically switched OFF.

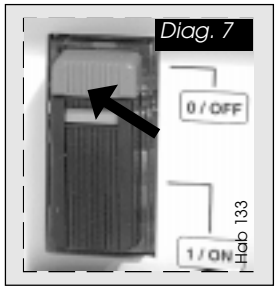

THELIA SB 23

HEATING ONLY

• Turn the selector switch (**diagram. 8**) to position (winter).

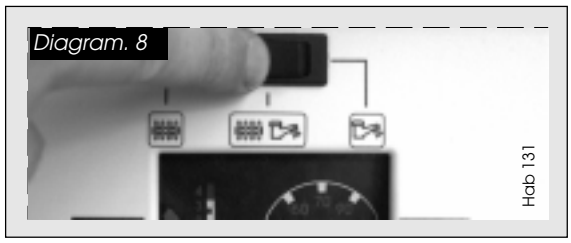

• **Heating** : turn the knob (**diagram. 9**) in order to obtain a water temperature suited to the demand, and adjust the room thermostat to the desired temperature.

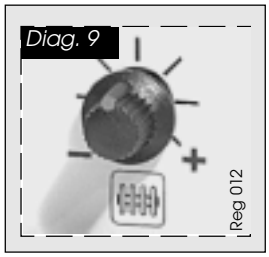

Note : If you are out for a few days, set the button (**diagram. 9**) to the minimum value in order to protect the boiler from frost. In case of prolonged absence, refer to "**Draining**" section page **9**.

ALTERNATIVE OPERATING MODE THELIA SB 23

You may select the operating mode using the switch (**diagram. 8**) :

Winter		Heating only
Summer		Domestic hot water only mode. The boiler will keep the separate storage cylinder, where fitted, at the desired temperature.
Winter		Heating and domestic hot water mode

STOPPING THE BOILER

• Press the (**O/OFF**) push-button (**diagram. 10**) : this will close OFF the gas supply valve. Electrical power supply to the boiler will be automatically switched OFF.

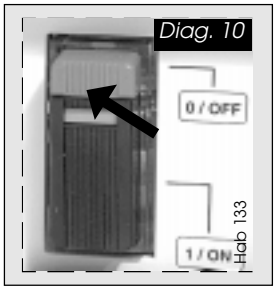

The boiler is connected to the electrical supply and switched on.
IF FITTED, SET THE CLOCK TO WORK, AS THE INSTRUCTIONS BELOW.

General Description
The timeclock has an internal, factory set programme which switches the boiler "On" and "Off" three times a day as below.

1st	ON	06.30
1st	OFF	08.30
2nd	ON	12.00
2nd	OFF	12.00
3rd	ON	16.30
3rd	OFF	22.30

It also has an advance feature, a hold or holiday feature, details on how to set these are given further on in these instructions.

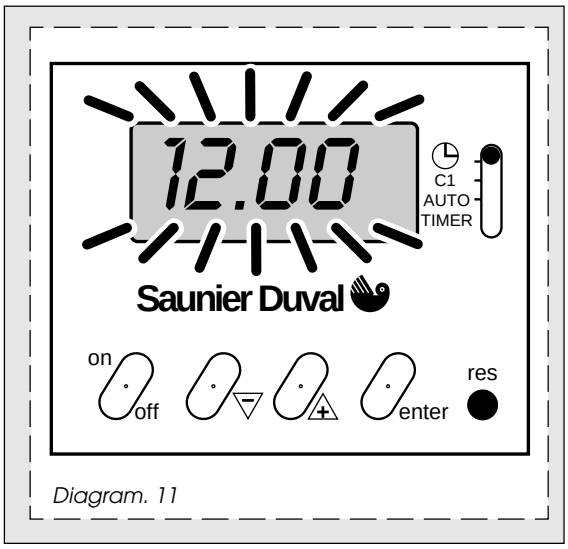

Diagram. 11

Setting the Time
With the electrical supply to the boiler switched on, place the slide switch to "◷ ".
Press the "Reset" (res) button for a few seconds, using a pointed object, such as a pencil. When released the display will begin to flash, see **diagram 11.**
Using the "△ "and " ▽ " buttons, set the display to the correct time in twenty four hour format, for example, 1300 for 1pm, see **diagram 12.**

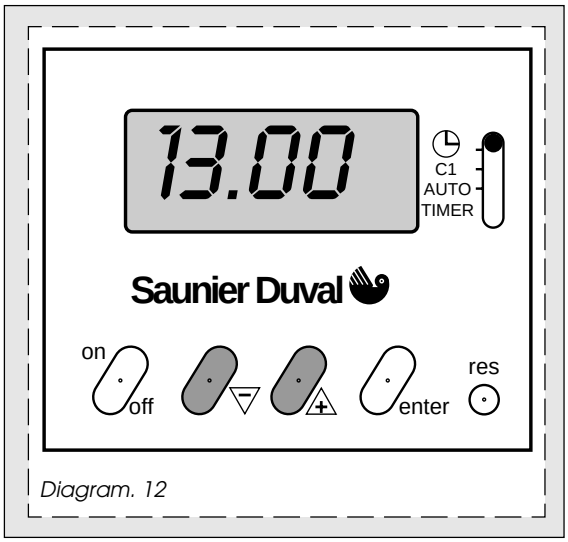

Diagram. 12

Helpful Hint
The "△" and "▽" buttons are used to change times. Press and release for small changes. If you press and hold down the time will "run".

To Set the Programme "On" and "Off" Times
At this stage, if you want to use the internal, factory set, programmes simply place the slide switch to "Auto". The display will show the current time. The "On" or "Off" symbol will be shown according to the time of day.

To Override or Advance the Timeclock
To advance the time clock operation, that is, switch the heating "On" when it is "Off" or the other way round, press the "On/Off" button. The timeclock will switch the heating "On" or "Off" as desired and the "On" or "Off" symbol will flash to show that it has been overridden. See **diagram 13.**
Note. The boiler will stay "On" or "Off", as selected, until the timeclock programme reaches its next "On" or "Off" time. From then on, the timeclock will switch the boiler "On" and "Off" according to the internal programme. When the boiler is again controlled by the internal programme the "On" or "Off" symbol will stop flashing. The timeclock operation can be overridden in this way at any time.

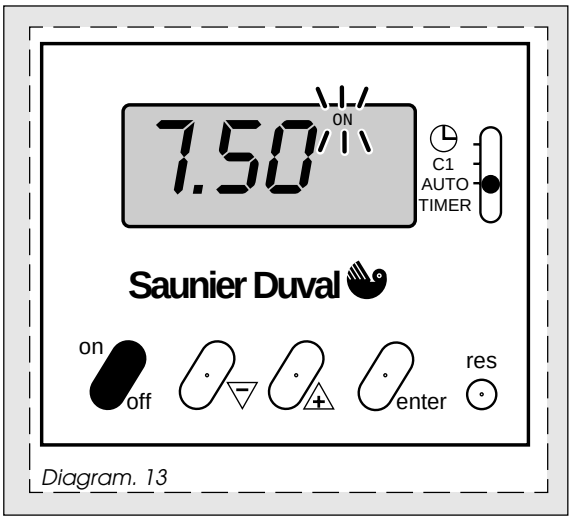

Diagram. 13

CLOCK - INSTRUCTIONS FOR USE

To Set Your Own Programme "On" and "Off" Times
Note. The timeclock can be set to give a minimum of one and a maximum of three "On" and "Off" times.
Place the slide switch to "C1". Press the "Enter" button. The display will show the first "On" time, see **diagram 14.**

Using the " ⊕ " and " ⊖ " buttons, change the first "On" time to the time you require. Press the "Enter" button twice. This stores the new time and shows it to confirm it has been stored in the timeclock memory.

Press the "Enter" button again. The display will show the first "Off" time, see **diagram 15**.

Using the " ⊕ " and " ⊖ " button, change the first "Off" time to the time you require. Press the "Enter" button twice. The display will show the first "On" time. Press the "Enter" button again. The display will now show the first "Off" time you have just entered.

Repeat the above for the remaining "On" and "Off" times.

When you have set the "On" and "Off" times you require, place the slide switch to "Auto".
Note. If you do not want to set all three "On" and "Off" times, follow the above instructions, but, after you have set the times you require, set the other times to show a series of dashes, using the " ⊕ " and " ⊖ " button, see **diagram 16**.
The series of dashes are between times 23.59 and 0.00.

Helpful Hint.
If you get confused and wish to start again, press the "Reset" (res) button and the timeclock will go back to the internal factory set programme. You can now reset the current time and start again.

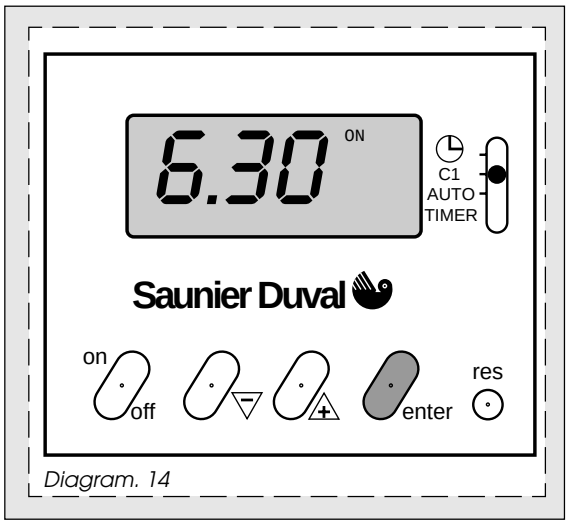

Diagram. 14

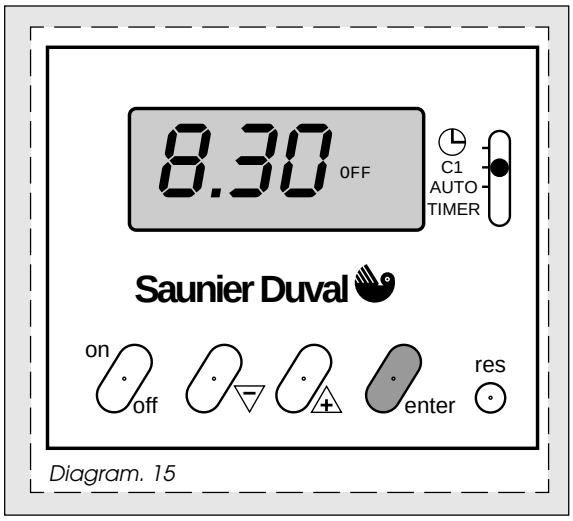

Diagram. 15

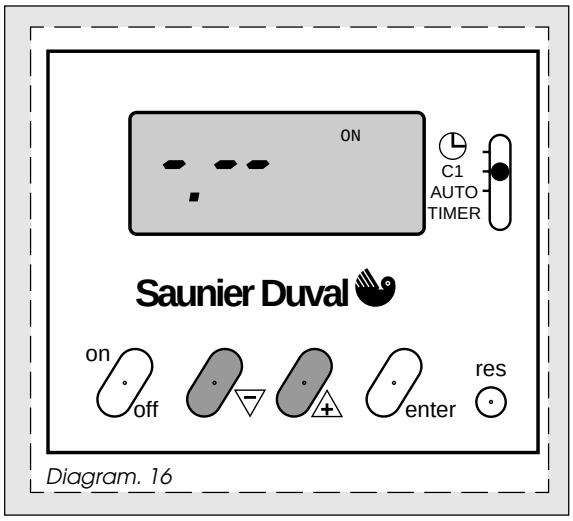

Diagram. 16

To Check the Programme "On" and "Off" Times

The programmed "On" and "Off" times can be checked at any time by moving the slide switch from "Auto" to "C1".

Successive presses of the "Enter" button will then show the "On" and "Off" times.

Always return the slide switch to "Auto" to return to normal timed working.

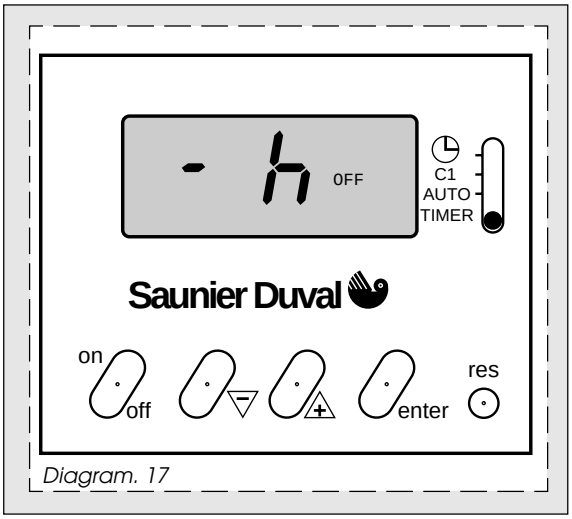

Diagram. 17

To Set the "Hold" or "Holiday" Feature

The timeclock has a "Hold" or "Holiday" feature which can be set, if required, to keep the central heating "On" or "Off" for a period between one hour and twenty seven days. This can be used, for example to keep the central heating "Off" during a holiday. After the programmed time has gone by, the boiler returns to its normal programmes.

To set the "Hold" or "Holiday" feature carry on as follows:

Place the slide switch to "Timer", the letter "h" will appear on the display, see **diagram 17**.

Using the " ⊕ " and " ⊖ " buttons, set the "Hold" time required.

After a hold period of twenty three hours has been exceeded, the "h" symbol on the display will change to a "d". The "hold" time will now be in days, instead of hours, see **diagram 18**.

Use the "On/Off" button to set the boiler to the required operation during the "Hold" period.

Place the slide switch to "Auto". After the programmed hold time, the boiler will return to normal timed working.

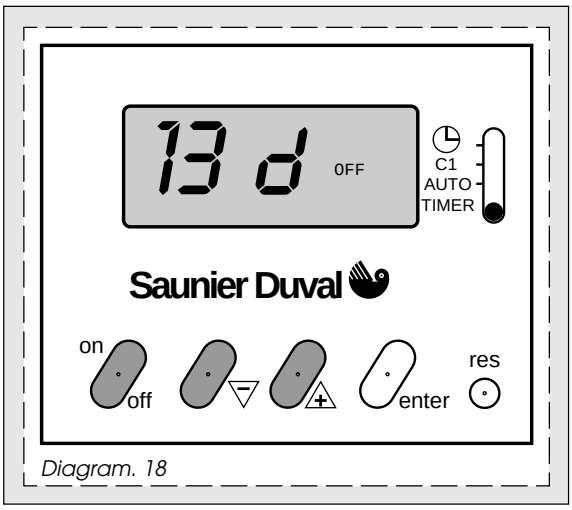

Diagram. 18

DRAINING

Protection against freezing
If the boiler is to be out of use for any long periods during severe weather conditions, it is recommended that the whole system, including the boiler, be drained to avoid the risk of freezing.
If in doubt, consult your servicing company.

Draining and filling
Caution : the boiler is installed as part of a sealed system which must only be drained and filled by a competent person.
Note : If there is persistent loss of system pressure, indicated by the pressure gauge, you must contact the installer or servicing company.

Safety valve
CAUTION. A safety valve with a discharge pipe is fitted to this boiler.
The valve **MUST NOT BE TOUCHED** except by a competent person. If the valve discharges at any time, switch the boiler off and isolate it from the electrical supply. Contact your installation/servicing company.

SERVICING/MAINTENANCE

To ensure the continued efficient and safe operation of the boiler it is recommended that it is checked and serviced at regular intervals. The frequency of servicing will depend upon the installation conditions and usage but, in general, once a year should be enough

Cleaning
The boiler casing can be cleaned with a damp cloth followed by a dry cloth to polish.
Do not use abrasive or solvent cleaners.

Boiler casing
CAUTION. Do not remove or adjust the casing in any way, as incorrect fitting may result in faulty operation. If in doubt contact your installation/servicing company.

			THELIA 23	THELIA 23 E	THELIA SB 23
Heating useful output,	adjustable from...	(kW)	8,9	8,9	8,9
		(BTU/H)	30,000	30,000	30,000
	to...	(kW)	23,3	23,3	23,3
		(BTU/H)	80,000	80,000	80,000
Efficiency		(%)	82,3	82,3	82,3
Heating max. output temperature		(°C)	87	87	87
Heating regulation			adjustable by user between 30 and 87°C		
Heating system expansion vessel, effective capacity		(l)	6,5	6,5	6,5
System max. capacity at 75°C		(l)	140	140	140
Safety valve, maximum service pressure		(bar)	3	3	3
Products outlet		(Ø)	60	60	60
Fresh air inlet		(Ø)	100	100	100
Output in hot water mode,	automatically variable from...	(kW)	8,9	8,9	—
		(BTU/H)	30,000	30,000	—
	to...	(kW)	23,3	23,3	—
		(BTU/H)	80,000	80,000	—
Max. hot water temperature		(°C)	65	65	—
Operating threshold flow rate in sanitary hot water mode		(l/min.)	3	3	—
Specific flow rate (for 30°C temperature rise)		(l/min.)	11	11	—
Mini. supply pressure		(bar)	0,3	0,3	—
Max. supply pressure		(bar)	10	10	—
Electrical supply		(V)	230	230	230
Amperage		(A)	0,73	0,73	0,73
Max. power absorbed		(W)	130	130	130

Natural Gas (G20)	Ø Pilot injector	(mm)	0,28	—	0,28
	Ø Burner injector	(mm)	1,20	1,20	1,20
	Inlet pressure	(mbar)	20	20	20
	Gas rate (maximum)	(m^3/h)	2,70	2,70	2,70
	Gas rate (minimum)	(m^3/h)	1,13	1,13	1,13
Butane (G 30)	Ø Pilot injector	(mm)	0,18	—	0,18
	Ø Burner injector	(mm)	0,73	0,73	0,73
	Inlet pressure	(mbar)	29	29	29
	Gas rate (maximum)	(kg/h)	2,01	2,01	2,01
	Gas rate (minimum)	(kg/h)	0,84	0,84	0,84
Propane (G31)	Ø Pilot injector	(mm)	0,18	—	0,18
	Ø Burner injector	(mm)	0,73	0,73	0,73
	Inlet pressure	(mbar)	37	37	37
	Gas rate (maximum)	(kg/h)	1,98	1,98	1,98
	Gas rate (minimum)	(kg/h)	0,83	0,83	0,83
Town gas (G130)	Ø Pilot injector	(mm)	—	—	—
	Ø Burner injector	(mm)	—	2,40	—
	Inlet pressure	(mbar)	—	8	—
	Gas rate (maximum)	(m^3/h)	—	3,88	—
	Gas rate (minimum)	(m^3/h)	—	1,63	—

TECHNICAL DATA

Burner pressure (mbar)

	Heat output														
(kW)	8,9	10	11	12	13	14	15	16	17	18	19	20	21	22	23,3
(Btu/h)	30387	34142	37557	40971	44385	47799	51214	54628	58042	61456	64871	68285	71699	75113	79552
	Heat input														
(kW)	11,9	13,1	14,2	15,3	16,4	17,5	18,7	19,9	21,1	22,2	23,4	24,6	25,6	26,8	28,3
(Btu/h)	40678	44631	48410	52326	56042	59742	63794	67819	71897	75872	79910	83836	87545	91412	96602

GAS																
G 20	(mbar)	1,8	2,2	2,6	3,1	3,5	4,0	4,5	5,1	5,8	6,4	7,1	7,8	8,5	9,3	10,4
G 30	(mbar)	4,1	5,0	5,9	6,8	7,8	8,9	10,2	11,5	12,9	14,4	15,9	17,5	19,1	20,9	23,3
G 31	(mbar)	5,3	6,4	7,5	8,7	10,0	11,4	13,0	14,7	16,5	18,4	20,4	22,4	24,5	26,7	29,8
G 130	(mbar)	0,5	0,6	0,7	0,8	0,9	1,0	1,2	1,3	1,5	1,7	1,8	2,0	2,2	2,4	2,7

Pump
The performance of the pump, running at maximum speed, varies according to the pump bypass setting, see diagram **19**.

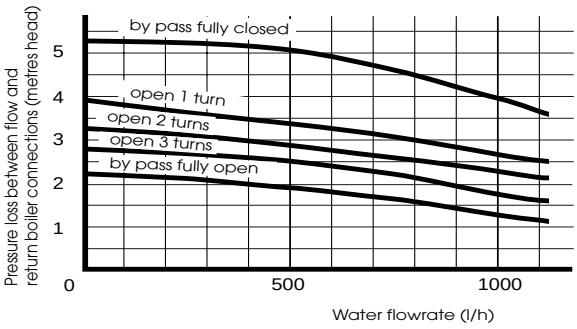

Pom 023

Diagram. 19

DIMENSIONS

Diagram. 20

The boiler is delivered in three separate packages :
- the boiler itself
- its connection plate
- the flue system.

THELIA 23, THELIA 23 E
Net weight : 41 kg
Gross weight : 43 kg

THELIA SB 23
Net weight : 40 kg
Gross weight : 42 kg

OPENING THE CONTROL PANEL COVER

Hab 129

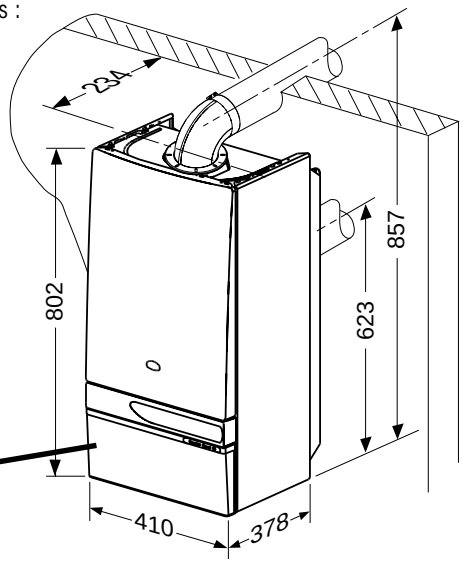

Hab 132

THELIA 23, THELIA 23 E

1 - "ON" push - button.
2 - "OFF" push - button.
3 - Spark generator.
4 - Central heating water temperature adjustment.
5 - Temperature gauge.
6 - Pressure gauge.
7 - Summer - Winter lever.
8 - Expansion vessel.
9 - Pump.
10 - Automatic air vent.
11 - Burner.
12 - Heat exchanger air vent.
13 - Heat exchanger.
14 - Multi - functional control.
15 - Safety electrovalve (**THELIA 23 E** only).
16 - Hight limit thermostat.
17 - Ignition electrode.
18 - Pilot (not **THELIA 23 E**)
19 - Hot water thermistor.
20 - Flame sense electrode (**THELIA 23 E** only).
21 - Loss of water switch.
22 - Fan.
23 - Airflow switch.
30 - Domestic hot water temperature adjustment.

A - Heating return
B - Cold water
C - Heating flow
D - Domestic hot water out
F - Gas inlet

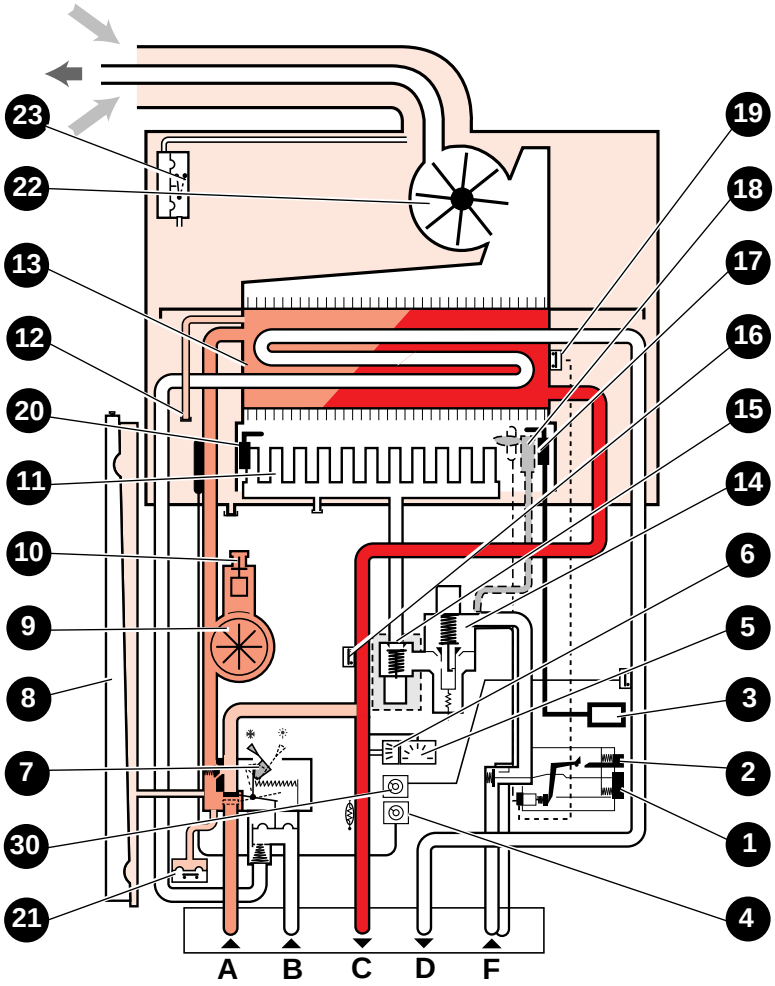

Shy 067a

Diagram. 21

THELIA SB 23

1 - "ON" push - button.
2 - "OFF" push - button.
3 - Spark generator.
4 - Central heating water temperature adjustment.
5 - Temperature gauge.
6 - Pressure gauge.
8 - Expansion vessel.
9 - Pump.
10 - Automatic air vent.
11 - Burner.
12 - Heat exchanger air vent.
13 - Heat exchanger.
14 - Multi - functional control.
16 - Hight limit thermostat.
17 - Ignition electrode.
18 - Pilot
19 - Hot water thermistor.
21 - Loss of water switch.
22 - Fan.
23 - Airflow switch.

A - Heating return
C - Heating flow
F - Gas inlet

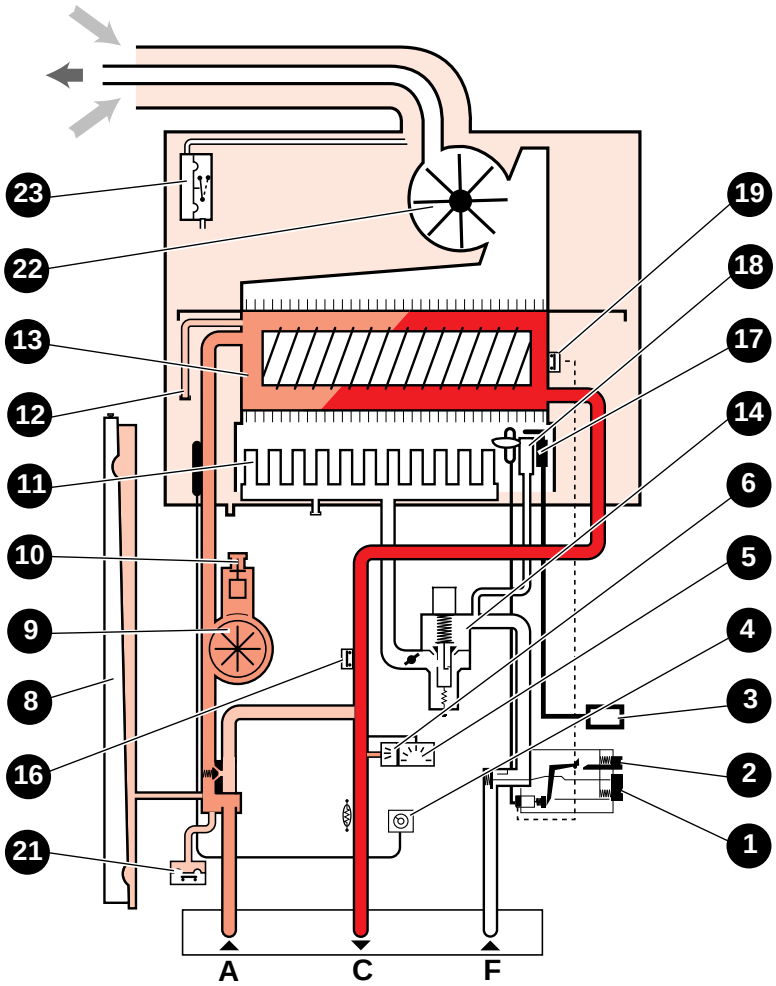

Shy 068a

Diagram. 22

Diagram. 23

THELIA 23, THELIA 23 E

From left to right, **the connection plate** is equipped with :

A - Heating return with isolating valve (**m**).
B - Cold water inlet with isolating valve (**p**).
C - Heating flow with isolating valve (**q**), drain screw (**r**) and safety valve (**s**).
D - Domestic hot water out.
E - Electrical connector.
F - Gas service cock.

Filters and washers :
1 - Fibre washer
2 - Metal filter
3 - Flow regulator
4 - Plastic filter
5, **6** & **7 -** Black graphite

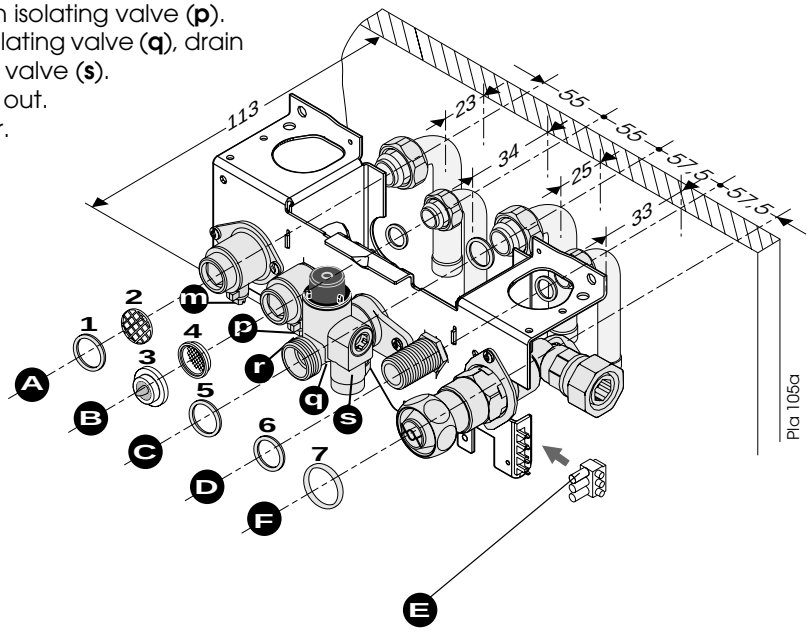

THELIA SB 23

From left to right, **the connection plate** is equipped with :

A - Heating return with isolating valve (**m**).
C - Heating flow with isolating valve (**q**), drain screw (**r**) and safety valve (**s**).
E - Electrical connector.
F - Gas service cock.

Filters and washers :
1 - Fibre washer
2 - Metal filter
5 & **7 -** Black graphite

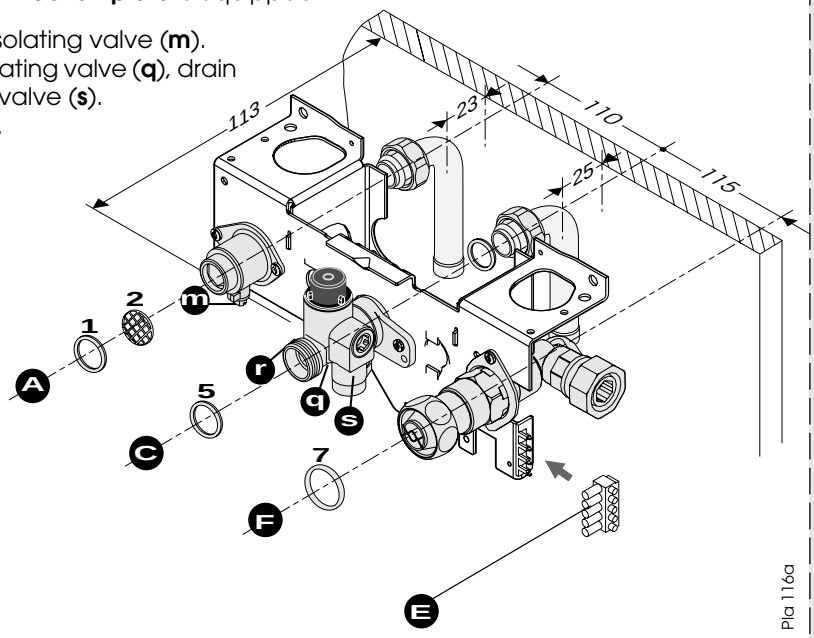

PIPING SYSTEM INSTALLATION

Water connection
Connect the water pipes to the fixing jig connecting plate using the copper tails supplied.
Warning : To prevent damage to the isolating cocks, do not solder joints or fittings with the copper tails connected.

Safety valve discharge
WARNING. It must not discharge above an entrance or window or any type of public access area.
Connect the safety valve discharge pipe to the valve, the discharge must be extended, using not less than 15 mm o.d. pipe, to discharge, in a visible position, outside the building, facing downward, preferably over a drain. The pipe must have a continuous fall and be routed to a position so that any discharge of water, possibly boiling or steam cannot create any danger to persons, damage to property or external electrical components and wiring. Tighten all pipe connection joints.

Gas connection
- The supply from the governed gas meter must be of adequate size to provide a constant inlet working pressure of 20 mbar (8 in wg).

To avoid low gas pressure problems, it is recommended that the supply is connected using 22 mm pipe wherever possible.

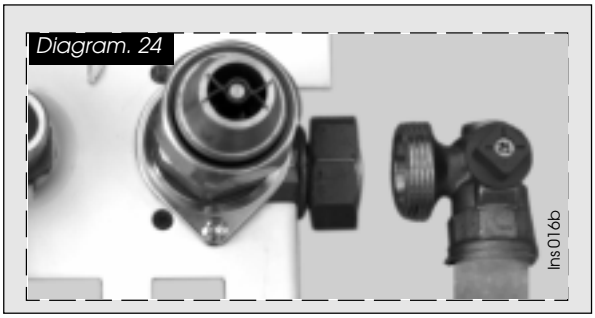

Diagram. 24

- On completion the gas installation must be tested using the pressure drop method and purged in accordance with the current issue of BS6891
- Connect the gas supply to the gas service cock and then the gas service cock to the union on the gas inlet elbow, see **diagram 24**.
- If it is an existing LPG installation ensure that it is capable of providing sufficient additional quantity of gas.

Gas Safety (Installation and Use) Regulations
In your interests and that of gas safety, it is the law that ALL gas appliances are installed and serviced by a competent person in accordance with the above regulations.

HEATING SYSTEM DESIGN

- The boilers are compatible with any type of installation.
- Heating surfaces may consist of radiators, convectors or fan assisted convectors.

Caution : if the materials used are of different types, corrosion phenomena may develop. In such case, adding a corrosion inhibitor in heating system water is recommended, in the proportions specified by the manufacturer, to prevent gas and oxide formation.
- Pipe sectional areas shall be determined in accordance with normal practices, using the output/pressure curve (**diagram. 19**). The distribution system shall be calculated in accordance with the output corresponding to the actual system demand, not the maximum output of that the boiler. However, provision shall be made to ensure sufficient output so that the temperature difference between the flow and return pipes be less than, or equivalent to 20°C. The minimum flow is 500 l/h.
- The piping system shall be routed so as to avoid any air pockets and facilitate permanent venting of the installation. Bleed fittings shall be provided at every high point of the piping system and on all radiators.
- The total volume of water permitted for the heating system depends, amongst other things, on the static head in cold condition. The expansion vessel integrated into the boiler is pressurised at 0.5 bar in the delivered condition (corresponding to a static head of 5 m WG) and allows a maximum volume of 140 litres for an average temperature of 75°C in the radiator system, and a maximum service pressure of 3 bar. This pressure setting can be modified at boiler commissioning stage if the static head is different.
- Provision shall be made for a drain valve at system's lowest point.
- Where thermostatic valves are fitted, not all radiators must be equipped with this type of valve and particulary where the room thermostat is installed.

In the case of an existing installation, it is essential that the radiator system be thoroughly flushed prior to installing the new boiler.

- Copper tubing must be used for the domestic hot water system. Unnecessary pressure losses should be avoided.
- The boiler may operate with a minimum supply pressure of 0.3 bar, but under reduced flow rate. Best operating comfort will be obtained from a supply pressure of 1 bar.
- In some installations it will be necessary to provide a means of accommodating expansion water. A domestic hot water expansion vessel is available as an accessory from your supplier.

BOILER LOCATION

Clearances
The position of the boiler must be such that there is adequate space for servicing.
The recommended clearances are:
50mm either side of the boiler.
600mm at the front of the boiler.
300mm below the boiler.

Fixing jig
The fixing jig is supplied in three parts :
1) The connecting plate which allows the connection and soundness testing of all the pipework before the boiler is fitted and helps support the weight of the boiler.
2) The hook which supports the weight of the boiler.
3) The template which ensures the hook and the connecting plate are correctly fitted relative to one another.
Place template on wall in required position making allowance for the necessary clearances etc.

Mark the position of the holes for the hook and the connecting plate.
Drill, plug and fix the connecting plate and hook to the wall using suitable screws.

Check that both the connecting plate and hook are level.
If the boiler is not installed immediately, protect the various couplings to prevent any ingress of foreign materials E.G. plaster, paint, etc.

Terminal position
The minimum acceptable spacings from the terminal to obstructions and ventilation openings are as shown in **diagram 26**.
The boiler must be installed so that the terminal is exposed to the external air.

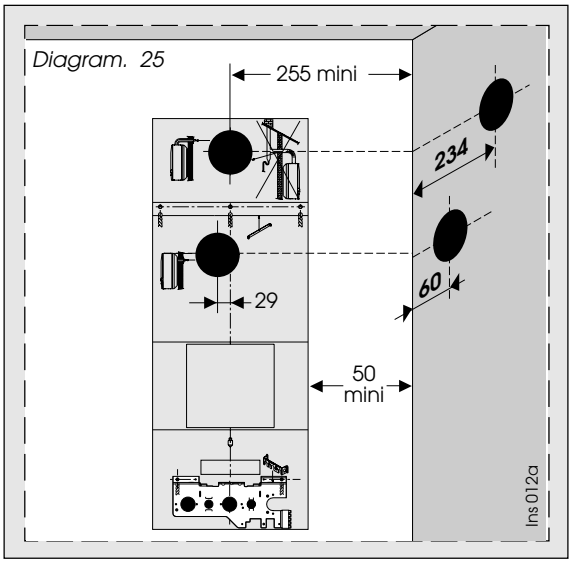

Note. Under certain weather conditions the flue may produce a plume of condensation.
If the terminal is fitted within 850mm of a plastic or painted gutter or 450 mm of painted eaves, an aluminium shield of a minimum length 750 mm should be fitted to the underside of the gutter or painted surface.

Terminal guard
If a terminal guard is required, a suitable guard with integral deflector can be obtained from your supplier, Saunier Duval part number 85373.

Cupboard or compartment ventilation
The boiler can be fitted in a cupboard or compartment as long as adequate permanent high and low level ventilation is provided in accordance with ventilation requirements.

Diagram. 26

Minimum dimensions (in mm) for the positioning of flue terminals

A - under a window 600
B - under an air vent 600
C - under a gutter 300
D - under a balcony 300
E - from an adjacent window 400
F - from an adjacent air vent 600
G - from vertical or horizontal air pipes 600
H - from an external corner of the building 300
I - from an internal corner of the building 1000
L - from the ground or from another floor 1800
M - between two terminals vertically 1500
N - between two terminals horizontally 1000

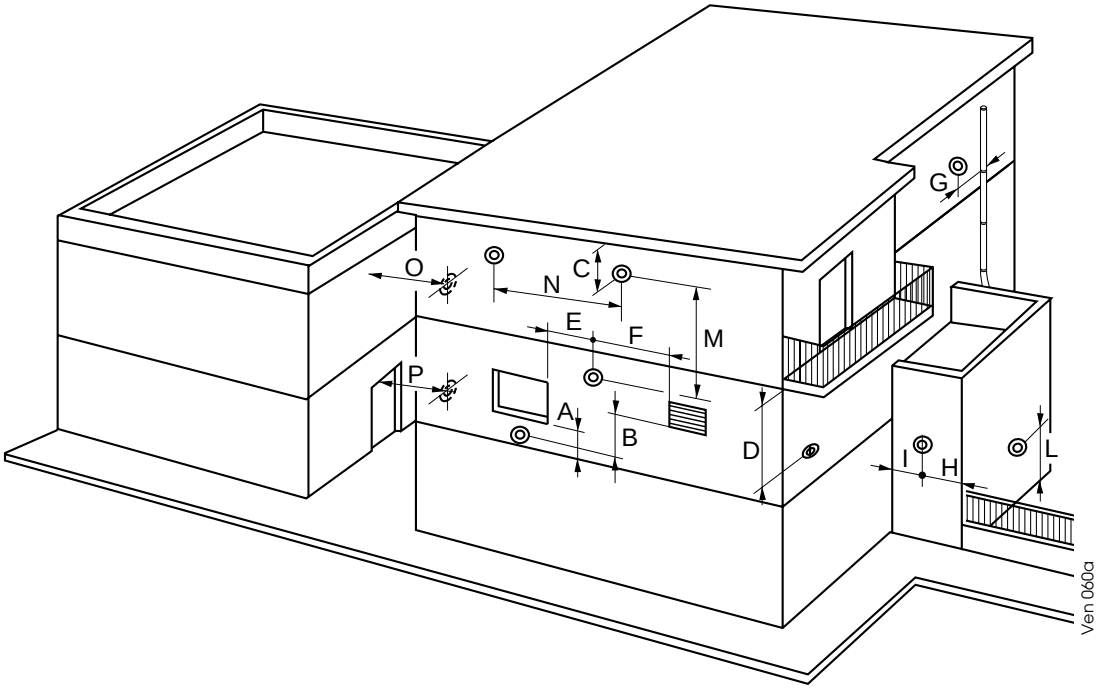

Statutory requirements
The installation of this boiler must be carried out by a competent person in accordance with the relevant requirements of the current issue of:

The Gas Safety (Installation and Use) Regulations
The Building Regulations
The local water company Byelaws
The Building Standards Regulations (Scotland)
The Health and Safety at Work Act

Sheet metal parts
WARNING. When installing or servicing this boiler, care should be taken when handling the edges of sheet metal parts to avoid the possibility of personal injury.

Installing the boiler
Prior to starting work, the system must be thoroughly flushed with a suitable cleaning agent so as to eliminate any foreign bodies and contaminants such as filings, weld particles, oil, grease etc.
NOTE : solvent products could cause damage to the system.

- Engage boiler upper part onto the retaining strip (**diagram 27**).
- Allow the boiler to seat down into position onto the support plate (**diagram 28**).
- Fit the filter and washers, strictly adhering to the sequential order and directions shown on **diagram 23**. Connect the various couplings between the boiler and connection plate.

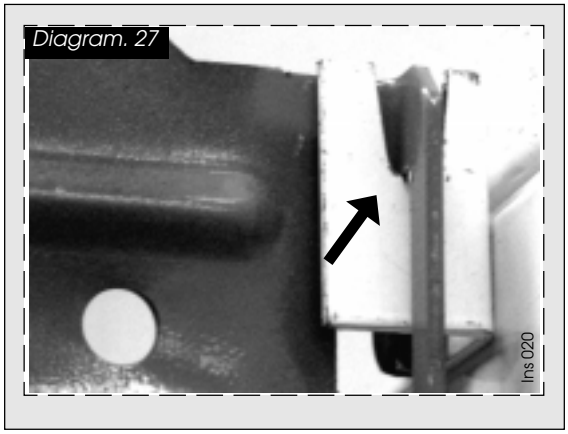

Diagram. 27

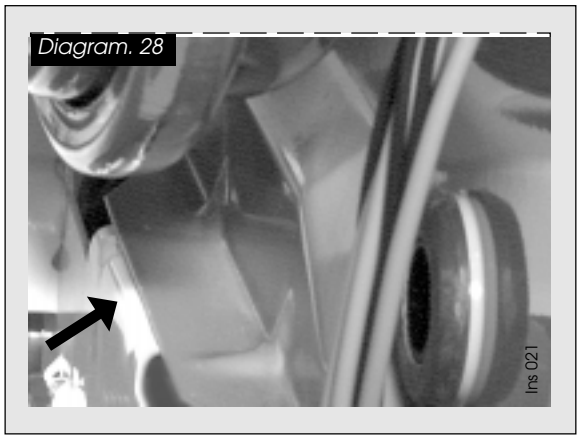

Diagram. 28

REAR OUTLET FLUE ASSEMBLY

The boiler is supplied for rear outlet flue connection.
Alternatively, the boiler is designed to allow the flue system to be connected to the top of the boiler, top outlet flue connection.
For top outlet flue installation refer to "**Top outlet flue**".

Rear outlet flue - Kit 104294
The rear outlet flue system consists of two parts, a PVC outer pipe and an aluminium inner, they are positively locked together when assembled.

The flue kit 104294, see **diagram 29**, is 750 mm long and comprises :

- Outer PVC pipe ..... **A**
- Inner aluminium pipe ..... **B**
- External rubber sealing collar ..... **C**
- Rubber connecting sleeve ..... **D**
- Flue elbow ..... **E**
- Internal rubber flange ..... **F**

A - Direct rear outlet flue
Mark correct position of hole from template using hole between hook and connecting plate.

B - Rear outlet side flue
Mark the horizontal centre line for the hole on the rear wall. Extend the horizontal centre line to the side wall and mark the vertical centre line of the flue hole as shown in **diagram 30**.

REAR OUTLET FLUE ASSEMBLY

Important : when cutting the flue hole and when extending the flue centre line to a side wall remember that the flue system must have a fall of about 35 mm per metre of flue DOWNWARD from the boiler. There must NEVER be an upward incline.

From the back of the boiler, loosen the screws holding the two flue connector clamps (**diag. 31**) and slide them away from flue outlet.

Remove straight flue connector and fit elbow (**E**) into rear of the boiler, fitting flush end of elbow into position and tighten screws, see **diag. 32**.

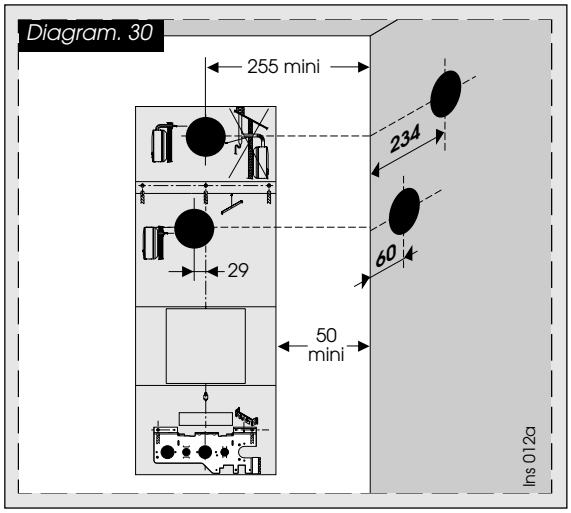

Cutting the flue hole
Making allowance for the slope of the flue, cut the hole in the external wall, preferably using a 115 mm diameter core drill. If necessary, make good at both the inner and outer surface of the wall.
Important : before cutting the hole for flues directly to the rear of the boiler, always cover the fixing jig to make sure it is not damaged.

Calculation of flue cutting lengths
Measure the wall thickness **e** (mm).

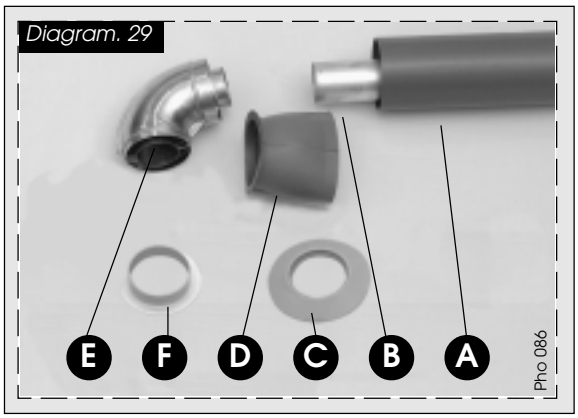

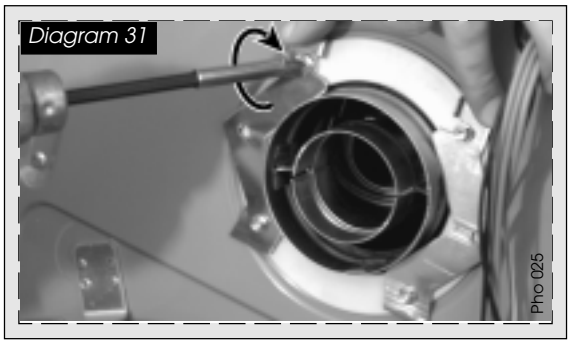

For side flues, measure distance from inside face of the side wall to the centre line of the boiler and subtract 205 mm to get dimension **a** (mm), see **diagram 33** or **34**.

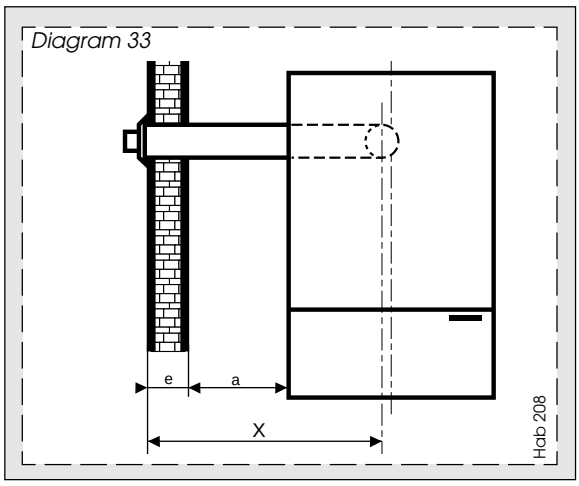

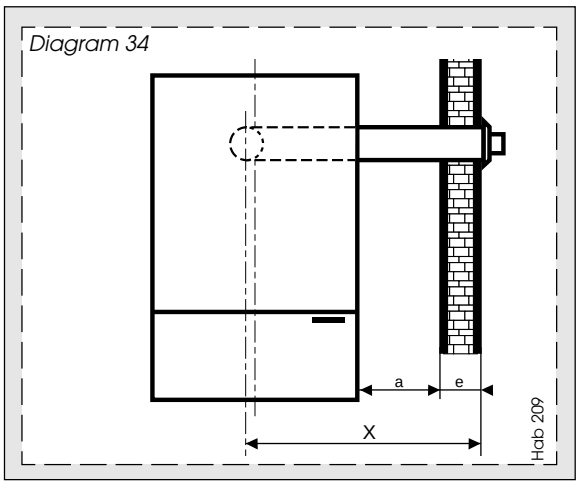

Refer to table **1** for the cutting lengths of both the PVC and the aluminium flue pipes for each of the various flue options available.
Important. All cutting lengths must be measured from the locking fitting end of the flue pipes, see **diagram 35**.

Extension kits
When the distance **X** measured on site is greater than given in table 1, a flue extension kit will be required, refer to **table 2**.

Assembly of extended flue
The flue extension kit, see **diagram 36**, comprises:
- PVC pipe ..... **A**
- PVC connector ..... **B**
- Aluminium pipe with fitted connector ..... **C**
- Triangular pipe support ..... **D**
- Two fixing screws ..... (**not shown**)

Table 1

Flue option	Cutting length (mm) PVC outer pipe	aluminium inner pipe	Comments
Back outlet Rear flue	e + 70	e + 195	maximum wall thickness "e" without extension 511 mm
Back outlet Side flue to left (diagram 5)	e + a + 35	e + a + 155	maximum distance "X" without extension 797 mm
Back outlet Side flue to right (diagram 6)	e + a + 90	e + a + 215	maximum distance "X" without extension 739 mm

The PVC connector is used to connect the PVC extension pipe to the PVC pipe supplied with the boiler or to another extension pipe, if more than one is used. It is a secure push fit onto the pipe ends, no adhesive is required.
The connector fitted to the aluminium extension pipe is fitted to the next extension pipe, if more than one is used. The two screws provided must be used to fasten the two pieces together once assembled, using the pre-drilled holes in both the connector and pipe end, see **diagram 37**.
The triangular pipe support should be slid onto the aluminium pipe before final assembly and positioned near the pipe joint to support and locate the inner pipe correctly within the outer PVC pipe.

Cutting lengths for extended flues
Using the correct number of the extension kits, as **table 2**, assemble both the extended PVC and aluminium pipes by adding the extension pieces to the flue pipes supplied with the boiler. Do not fasten the aluminium pipes together at this stage. Mark and cut both extended flue pipes, referring to **diagram 38**, using the cutting lengths given in **table 1**.

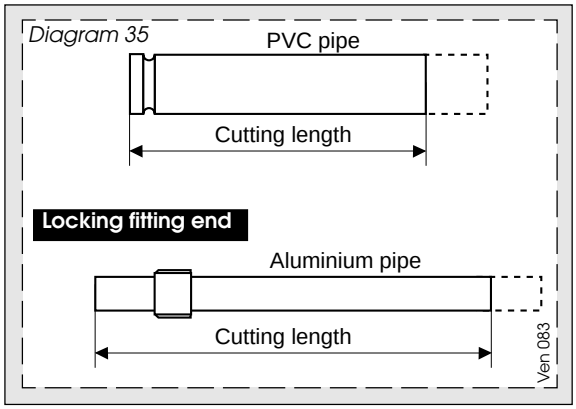

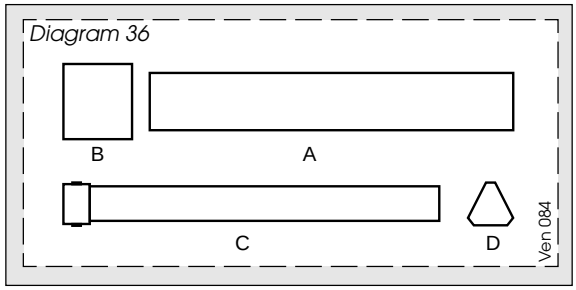

Table 2

Flue option	Dimension "X"	N° of extension kits
Side flue (left)	797 to 1527 mm 1527 to 2257 mm	1 2
Side flue (right)	739 to 1469 mm 1469 to 2199 mm	1 2

Important : all cutting lengths should be measured from the locking fitting end of the pipe.
Check before cutting. If the distance between the end of either of the cut pipes or the pipe connector will be 30 mm or less, refer to **diagram 39**, it will be necessary to reduce the length of both the PVC and aluminium extension pipes, and those supplied with the boiler, to achieve the required overall cutting length for the extended flue pipes.
Note : if the length of any aluminium pipes other than the final extension pipes have to be reduced in this way, it will be necessary to drill two fixing holes in these pipes to match the fixing holes in the aluminium connector.

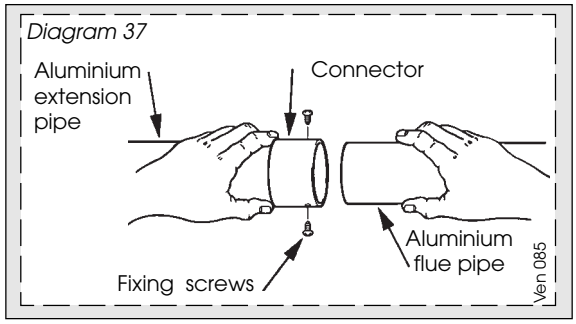

REAR OUTLET FLUE ASSEMBLY

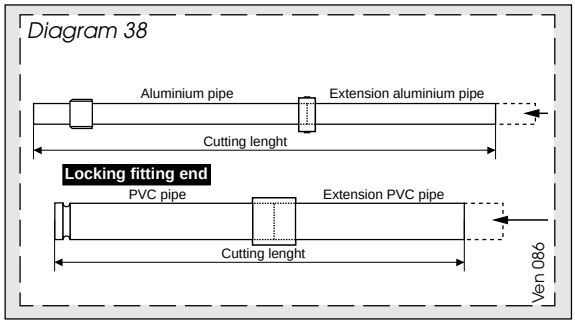

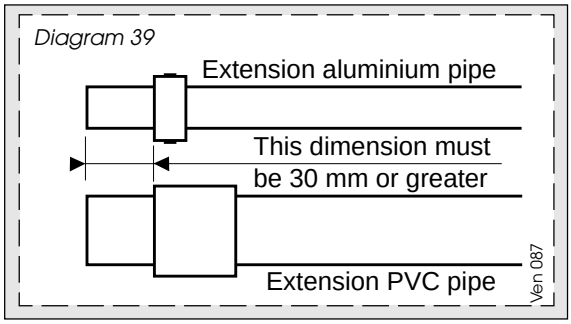

Installation of flue assembly

- Fit the PVC pipe (**A**) into the wall with locking fitting end to outside.
- Fit the rubber sealing collar (**C**) into the groove at the outer end of the PVC pipe.
- Pull the PVC pipe inwards to bring the rubber sealing collar hard against the external wall, see **diagram 40**.
- Spot drill two holes using a 2.5 mm drill through the flange and PVC pipe.
- Fasten the flange to the PVC pipe using the two self tapping screws provided.
- From inside, fully insert the aluminium pipe (**B**), locking end first, into the PVC pipe. Turn aluminium pipe anticlockwise, viewed from inside, as far as possible.
- Fit the rubber connecting sleeve (**D**), plain end first, onto the end of the PVC pipe. Push it on as far as possible.
- Lift the boiler and engage both fixing jig hooks in the two support brackets on the back of the boiler.
- Lower the boiler until it rests on the outward facing lip at the centre of the connecting plate.
- Make the connections between the boiler and connecting plate using the sealing washers, flow regulator and filters provided, see **diagram 41**.

Important : the gas connection must be made first as there is no flexibility in this connection. Do not forget the sealing washer.

- Connect the aluminium pipe onto the central outlet of either the straight flue connector or the flue elbow. To do this, the aluminium pipe must be held and turned clockwise, as viewed from inside. The aluminium pipe will move out from the PVC pipe and can be twisted onto the centre of the flue connector or elbow.
- Make sure that aluminium pipe is firmly fixed either to the flue connector or elbow and is correctly locked into the PVC outer pipe.

Note. The aluminium pipe is correctly fitted and locked only when the concentric spacer is FLUSH with the outermost end of the PVC pipe, see **diagram 42**.

- After checking that the aluminium pipe is correctly fitted, pull the rubber sleeve towards the boiler and fit the flanged end fully over the spigot of the boiler flue connector or elbow, to make a seal.

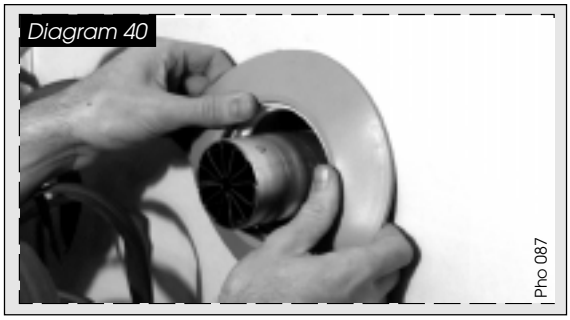

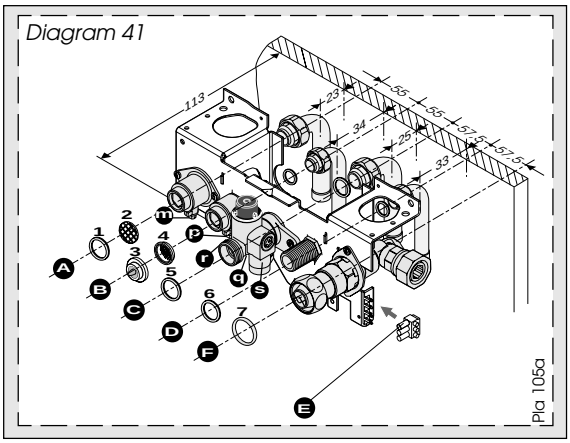

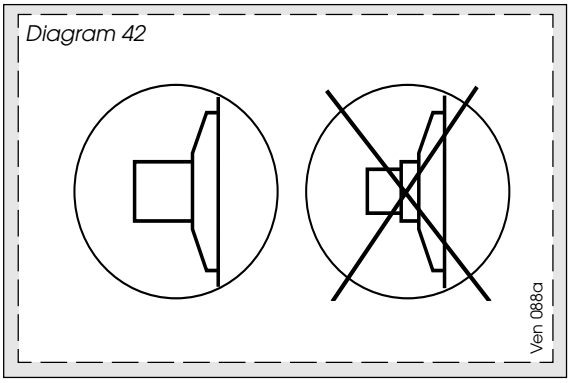

Top outlet flue - Kit 85089

The boiler is supplied for rear outlet flue connection. For a top outlet flue :

- Unscrew and remove the four screws and circular blanking plate from the top of the boiler.
- From rear of boiler, unscrew and remove four screws securing flue elbow clamps (**J**) to the rear outlet.
- Remove straight flue connector (**K**), plastic adaptor (**L**) and angled connector (**M**) and discard, see **diagram 43**.
- Fit circular blanking plate, previously removed from top of boiler, onto rear outlet of boiler.
- Disconnect power supply and earth leads from fan motor. Unscrew and remove the two fan retaining screws, see **diagram 44**.
- Remove fan assembly from boiler.
- Unscrew and remove the three screws holding fan to mounting plate. Turn the fan body through 90 degrees in relation to the mounting plate to leave fan outlet pointing upward.
- Using the alternative set of three holes in the mounting plate, fasten the fan to the mounting plate, see **diagram 45**.
- Disconnect air pressure switch tube from rear pressure tapping point and connect to pressure tapping point at top of boiler.
- Refit fan assembly into boiler.
- Fit the two retaining lugs at the back edge of fan mounting plate onto back edge of flue hood opening and bring fan mounting plate up against flue hood.
- Refit the two fixing screws.
- Reconnect power supply and earth leads to fan, the polarity is not important.

To fit the flue proceed as follows :

The flue **kit 85089**, see **diagram 46**, is 750 mm long and comprises:

- Outer pipe ..... **N**
- Inner pipe ..... **O**
- External rubber sealing collar. ..... **P**
- Plastic flange ..... **Q**
- Clamp and seal ..... **R**
- Gasket ..... **S**
- 2 'O' rings ..... **T**
- 4 screws ..... **U**
- Elbow ..... **V**

Cutting the flue hole

Follow the procedure described in the instructions for the rear outlet flue.

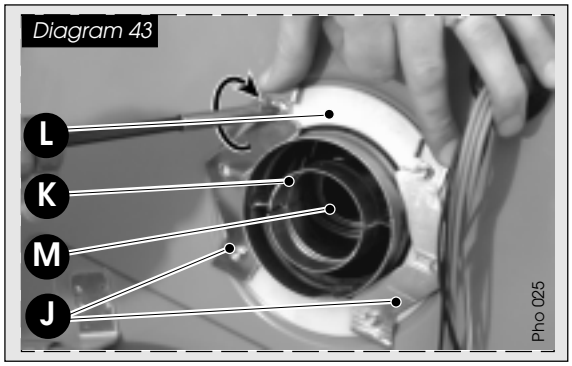

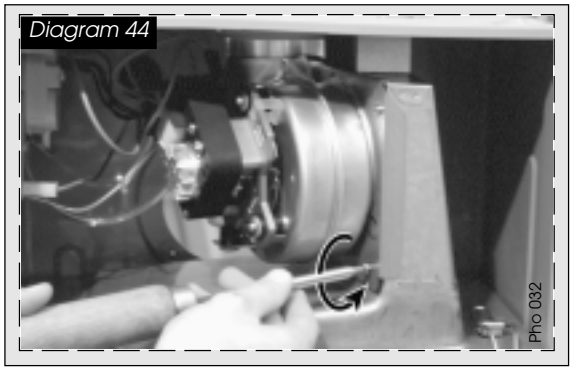

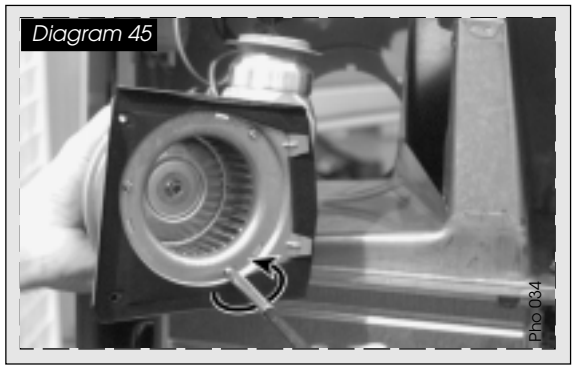

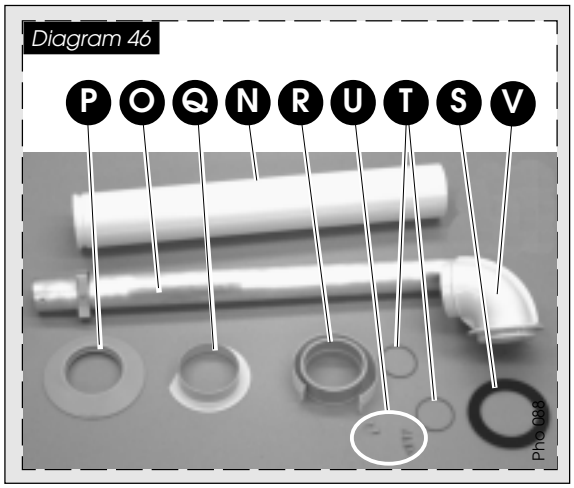

TOP OUTLET FLUE ASSEMBLY

Calculation of flue cutting lengths

Measure the wall thickness **e** (mm)

For side flues, measure distance from inside face of the side wall to the centre line of the boiler and subtract 205mm to get dimension **a** (mm), see **diagram 47**.

Refer to **table 3** for the cutting lengths of both the inner and outer flue pipes for each of the various flue options available.

Important : All flue cutting lengths must be measured from the terminal end of the flue pipes, see **diagram 49**.

When the dimension **X** measured on site is greater than that given in **table 3**, a flue extension kit will be required, refer to **table 4** for details.

Installation of flue assembly

- Fit the rubber sealing collar (**P**) into the groove at the outer end of the pipe (**N**).
- Fit the outer pipe (**N**) into the wall with the groove to the outside.
- Pull the pipe inwards to bring the rubber sealing collar hard against the external wall, see **diagram 40**.
- Lift the boiler and engage both fixing jig hooks in the two support brackets on the back of the boiler.
- Lower the boiler until it rests on the outward facing lip at the centre of the connecting plate.
- Make the connections between the boiler and connecting plate using the sealing washers, flow regulator and filters provided, see **diagram 41**.

Important. The gas connection must be made first as there is no flexibility in this connection. Do not forget the sealing washer.

- Fit the internal plastic flange (**Q**). Push it along the pipe until hard against the internal wall, see **diagram 48**.
- From inside, insert inner pipe (**O**) into the outer pipe.
- Fit both 'O' rings (**T**) into the flue elbow, one at the inlet, one at the outlet. By necessity they are a loose fit, apply a small amount of silicone grease to each 'O' ring when fitting.
- Slacken the two screws and fit the clamp and seal (**R**) onto the elbow.
- Take hold of the inner flue and push gently into the elbow outlet taking care not to tear the 'O' ring.

Important : if the flue has been cut, ensure that there are no burrs that could damage the 'O' ring.

- Push the elbow clamp and seal over the outer flue.
- Using the gasket supplied (**S**) fit the elbow onto the boiler and secure in position with four screws.
- Tighten clamp screws.

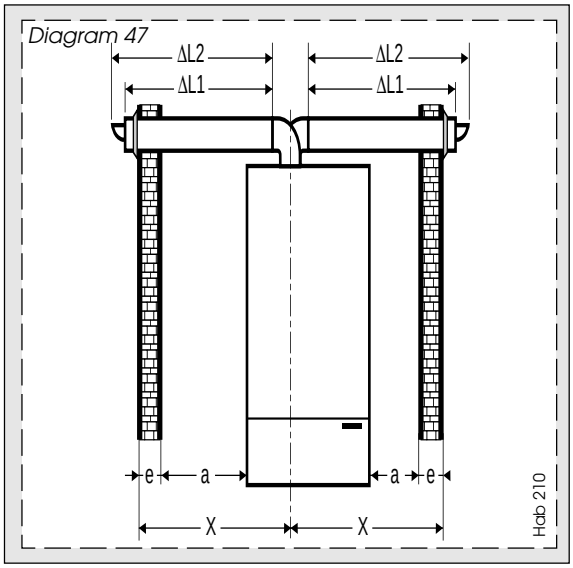

Table 3

Flue option	Cutting length (mm) PVC outer pipe	aluminium inner pipe	Comments
Top outlet Rear flue	e + 144	e + 224	maximum wall thickness "e" without extension 511 mm
Top outlet Side flue (right or left)	e + a + 115	e + a + 195	maximum distance "X" without extension 511 mm

Table 4

Flue option	Dimension "X"	N° of extension kits
Side flue (right or left)	745 to 1745 mm	1
	1527 to 2745 mm	2

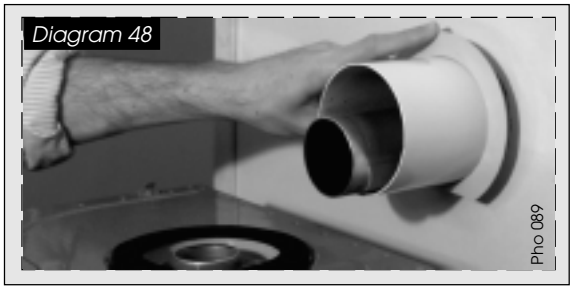

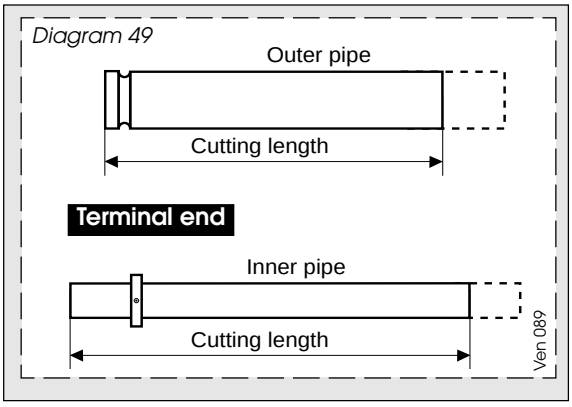

WARNING. This boiler must be earthed.
All system components shall be of an approved type.

Connection of the whole electrical system and any heating system controls to the electrical supply must be through a common isolator.

Isolation should preferably be by a double pole switched fused spur box having a minimum contact separation of 3 mm on each pole. The fused spur box should be readily accessible and preferably adjacent to the boiler. It should be identified as to its use.

Connect the integral supply lead, coiled and tucked behind the boiler, to the mains supply.
Important : The integral mains supply lead is specific to the boiler. A replacement can be obtained by quoting part number 57037.

A fused three pin plug and socked outlet may be used instead of the fused spur box provided that,
a) They are not used in a room contaning a fixed bath or shower
b) Both the plug and socket comply with the current issue of BS 1363.

The mains electrical supply must be maintained at all times in order to provide correct operation of the boiler.

Do not interrupt the supply with a time switch or programmer.

WARNING. ON NO ACCOUNT MUST ANY EXTERNAL VOLTAGE BE APPLIED TO ANY OF THE TERMINALS ON THE HEATING CONTROLS CONNECTION PLUG.

Warning : This appliance must be wired in accordance with these instructions. Any fault arising from incorrect wiring cannot be put right under the terms of the **Saunier Duval** guarantee.

Thelia 23 and Thelia 23E only - clock models
The boiler will work for heating without a room thermostat being connected provided that the wire link fitted between the top two terminals of the connector is left in place, see diagram **50a**.
A 230V room thermostat can be used but do not make any connection to the thermostat compensating resistor, see diagram **50a**.
ON NO ACCOUNT must any electrical voltage be applied to any of the terminals of the external controls plug.

Thelia 23 and Thelia 23E only - non-clock models
The boiler will work for heating without a room thermostat and/or timeswitch being connected provided that the wire link fitted between the top two terminals of the connector is left in place, see diagram **50a**.
A 230V room thermostat can be used but do not make any connection to the compensating resistor, see diagram **50a**.
ON NO ACCOUNT must any electrical voltage be applied to any of the terminals of the external controls plug.
For use with a timeswitch or timeswitch and room thermostat see diagram **50a**.

Thelia SB23 only
The boiler will work for heating without a room thermostat and/or timeswitch being connected provided that the wire link fitted between the top two terminals of the connector is left in place, see diagram **50b**.
A 230V room thermostat can be used but do not make any connection to the compensating resistor, see diagram **50b**.
ON NO ACCOUNT must any electrical voltage be applied to any of the terminals of the external controls plug.

A voltage free storage cylinder thermostat, where fitted, should be connected to the lower two terminals of the external controls plug, see diag. **50b**.
ON NO ACCOUNT must any electrical voltage be applied to any of the terminals of this plug.

All models
In case of difficulty obtaining a suitable timeclock/room thermostat, a programmable room thermostat is available as an accessory, **Saunier Duval** part number 40010. Please contact your supplier.

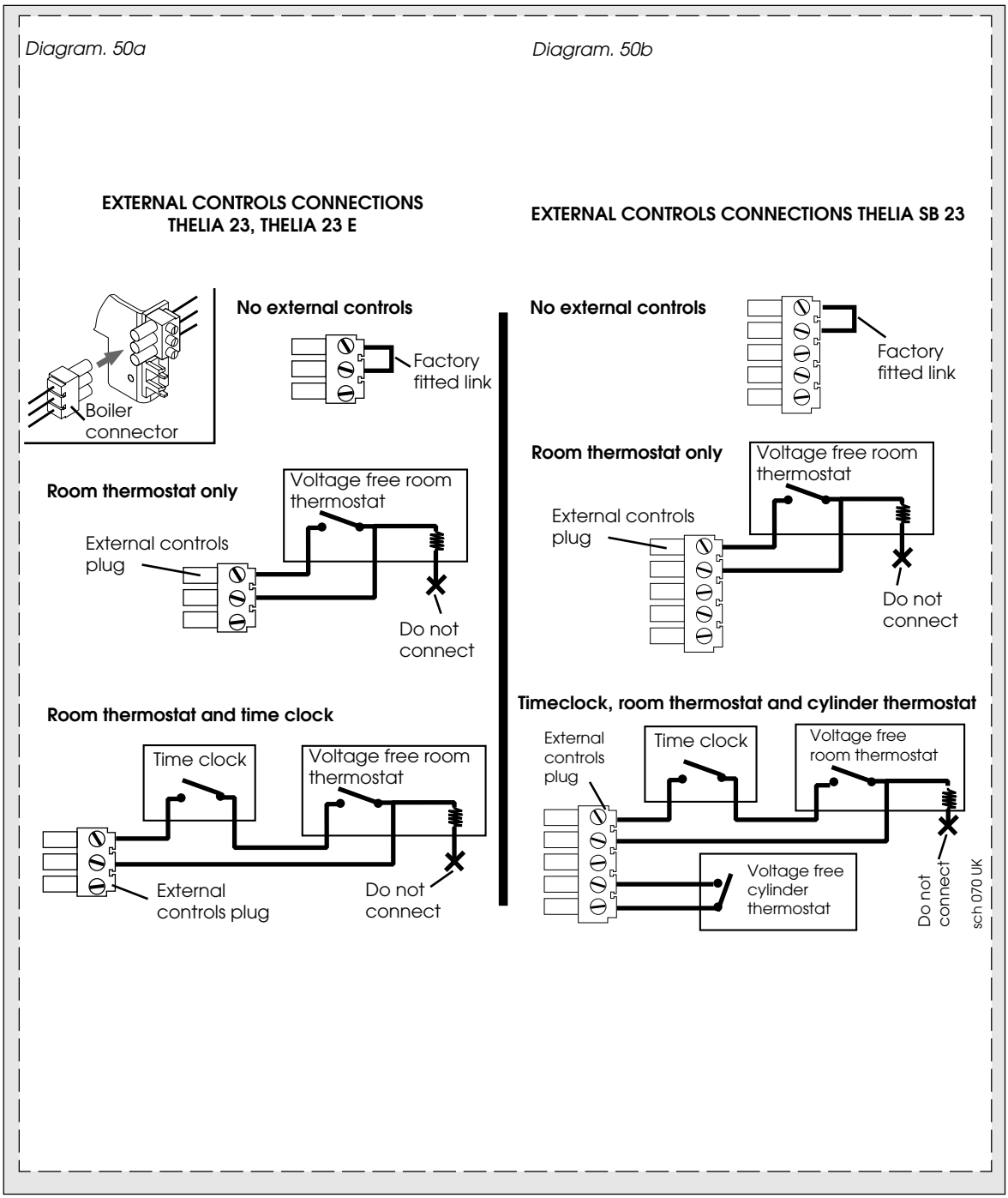
Diagram. 50a
EXTERNAL CONTROLS CONNECTIONS
THELIA 23, THELIA 23 E
Boiler connector
No external controls
Factory fitted link
Room thermostat only
Voltage free room thermostat
External controls plug
Do not connect
Room thermostat and time clock
Time clock
Voltage free room thermostat
External controls plug
Do not connect
Diagram. 50b
EXTERNAL CONTROLS CONNECTIONS THELIA SB 23
No external controls
Factory fitted link
Room thermostat only
Voltage free room thermostat
External controls plug
Do not connect
Timeclock, room thermostat and cylinder thermostat
External controls plug
Time clock
Voltage free room thermostat
Voltage free cylinder thermostat
Do not connect
sch 070 UK

The commissioning and first firing of the boiler must only be done by a competent person.

Gas installation

- It is recommended that any air is purged from the pilot supply pipe (**THELIA 23 and THELIA SB23**) and from the inlet test point (**THELIA 23E**).
- Isolate boiler from the electrical supply

THELIA 23 and THELIA SB 23

- Disconnect the supply pipe from the pilot injector tube by unscrewing nut.
- Carefully pull end of supply pipe downwards from the tube. Push in and hold black (**ON**) button until gas is present at the end of the pipe.
- Immediately release black button and reconnect pipe to pilot injector tube. DO NOT OVERTIGHTEN NUT.
- Check for gas soundness with black button pushed in.

THELIA 23E

- Remove screw from inlet test point at rear of multi-functional control.
- Push in and hold black (**ON**) button until gas is present at the inlet test point.
- Immediately release black button and replace screw to inlet test point.
- Check for gas soundness with black button pushed in.

Filling the system

- With the selector (**diagram. 51 or 52**) in the winter position or , open the shut-off valves (**q, m and p diagram. 53**) (the slot of the screw corresponds to flow direction), the bleed plug situated on the pump (**diagram. 54**), and the bleed valves.
- Open the heat exchanger bleed valve (**diagram. 55**) and bleed each radiator until a continuous jet of water is obtained. Screw the cap back tight.
- Do not close the pump bleed plug.
- Open the various water taps to bleed the system
- Make sure that pressure gauge pointer reads between **1** and **2** bar.

Important :

- When venting air from the boiler, do not touch the Schrader valve on the expansion vessel, it is NOT a vent.
- Before starting the boiler, turn the pump impellor to make sure it is free to move.
- Unscrew black cap on front of pump.
- Using screwdriver, push in pump spindle and turn pump impellor 3 to 4 times. DO NOT HIT SPINDLE. Replace black cap.

First starting-up

- Turn the selector (**diagram. 51 or 52**) to or position.
- Set the room thermostat for the maximum temperature and check that any external controls, if fitted, are calling for heat.

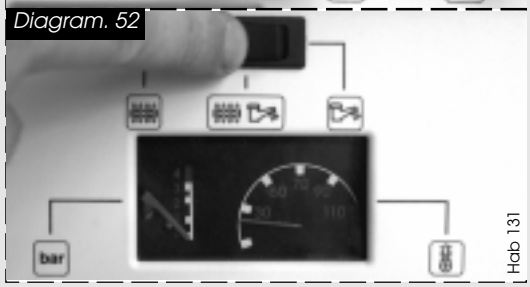

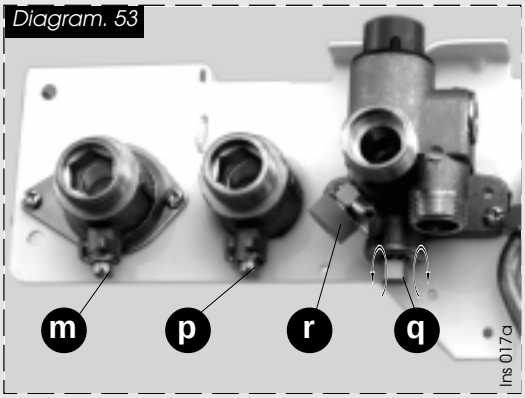

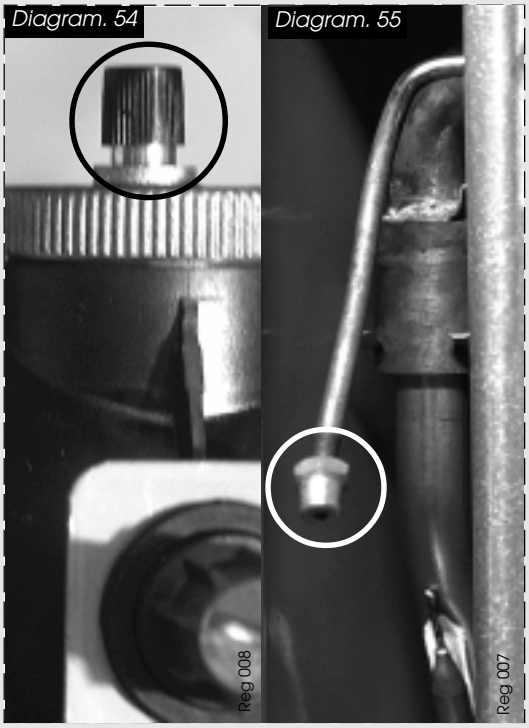

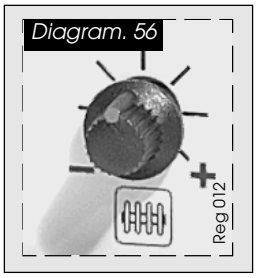

Diagram. 56

- Turn the knob (**diagram. 56**) to switch the boiler ON and OFF: clockwise to increase the temperature, anti-clockwise to decrease. The burner will automatically turn ON at full rating, at reduced rating, or will turn OFF.
- Allow the temperature to rise to the maximum value, with all radiator valves open. The temperature rise will cause release of the gases contained in the water of the central heating system :
- Gases driven toward the boiler will be automatically exhausted through the automatic air vent.
- The gases trapped at the highest point of the system must be released by bleeding the radiators.

On reaching maximum temperature, the boiler should be turned off and the system drained off as rapidly as possible whilst still hot.
- Refill the system to a pressure of 1 bar and vent as before.
- Restart the boiler and operate until maximum temperature is reached. Shut down the boiler and vent the heating system. If necessary, top up the heating system and make sure that a pressure of 1 bar is indicated on the pressure gauge when the system is COLD.

Starting the boiler

Before starting the boiler check that:
- The gas meter tap is open. If using butane or propane, check that valve on storage cylinder or tank is open.
- The boiler gas service cock is open.
- The boiler is connected to the electrical supply and switched on.
- The selector lever is in the left hand position.

Gas pressures

The main burner pressure should be checked during commissioning to make sure the correct input is obtained. Proceed as follows :
- Shut down boiler.
- Remove screw from test point on main burner, below sealed chamber of boiler (**see diag. 57**).
- Connect a suitable pressure gauge.
- Set selector lever to right hand, heating and hot water position.
- Start boiler as described in 'Instructions for Use'
- Set control thermostat to maximum, fully clockwise, and check that any external controls are calling for heat.
- Check that the reading on the gauge matches that given in 'Technical Data' for the type of gas being used.
- Move the selector lever to the left hand position, remove the pressure gauge, replace test point screw and check for gas soundness.
- If measured burner pressure differs greatly from the given figure, check the gas inlet pressure as follows:
- Shut down boiler.
- Remove screw from inlet test point at rear of multi-functional control.
- Connect a suitable pressure gauge.
- Start boiler as described in 'Instructions for Use'
- Check that the inlet pressure reading on the gauge matches that given in 'Technical Data' for the type of gas being used.
- Shut down boiler.
- Remove the pressure gauge, replace test point screw and check for gas soundness.
- If the gas pressure is incorrect, refer to the Fault Finding section in servicing instructions.
- If inlet pressure is below that given, the gas supply pipework/meter must be checked and any fault corrected.
- In the case of an LPG installation, check the storage tank or cylinder, regulator and pipework.

Diagram. 57

Air flow rate safety device
If an obstruction, even partial, of the flue occurs for any reason whatsoever, and causes reduction of the air flow rate, the built-in safety system of the boiler will be tripped: the burner will turn OFF and the fan will continue to run.
The boiler will be ready to operate when the fault has been cleared.

Gas leak or fault
If a gas leak or fault exists or is suspected, turn the boiler off and consult the local gas undertaking or your installation/servicing company.

In case of power supply failure
The boiler no longer operates.
As soon as power supply is restored, the boiler will be automatically re-started.

Overheating safety
This safety device causes safety shutdown of the boiler. If this happens, call the nearest after sales service department.

Important notice : a central heating system cannot operate satisfactorily unless it is properly filled with water, and unless the air initially contained in the piping systems has been properly bled off. If these conditions are not satisfied, air noise will occur within the system.

In case of loss of water in the system
CAUTION. The boiler is installed as part of a sealed system which must only be drained and filled by a competent person.
If the pressure shown on the pressure gauge (**diag. 58**) is less than 1 bar, the system must be filled-up immediately. Call the nearest after sales service department.

Air in the heating system
Persistent air in the heating system may indicate leaks in the system or corrosion taking place. Call the nearest after sales service department.

Diag. 58

Setting the heating output
The heating output of the boiler can be set between the minimum and maximum values given in the Technical Data, page **10**.
- Connect a suitable pressure gauge to the main burner test point as described previously.
- Set control thermostat to maximum, that is, turned fully clockwise.
- Check that all external controls are calling for heat.
- Start the boiler.

Adjustment is made using a small electrical screwdriver to adjust the potentiometer (**diagram. 59**) situated on the lower front panel. Turn the potentiometer clockwise to increase the burner pressure, anti clockwise to decrease.

- Open a hot water tap to a high flow rate, at least 8 litres/minute. The burner pressure should increase to the maximum values stated in 'Technical Data', if not refer to Fault Finding section in Servicing Booklet.
- Move the selector lever to the left hand position, remove the pressure gauge, replace test point screw and check for gas soundness.
- Using a ball point pen, clearly indicate on the data label the value the boiler is set to.

Note : This adjustment does not affect the domestic hot water output.

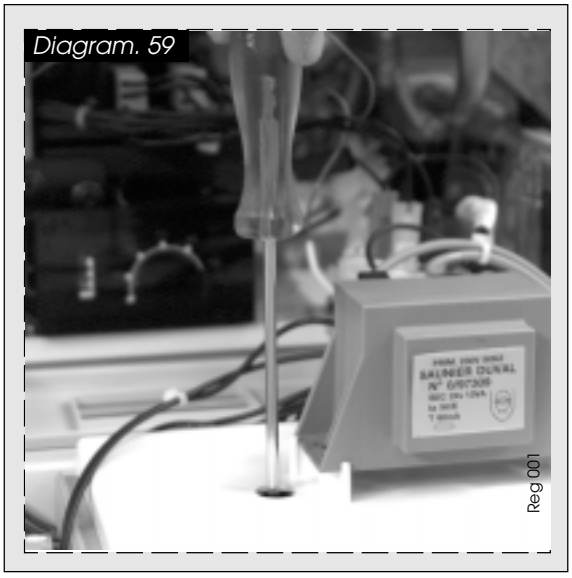

Diagram. 59

SETTINGS

Bypass
The built-in bypass must be adjusted according to the requirements of the system. Refer to the flow rate pressure curve (**diag. 19 p. 11**) The boiler is supplied with the built-in bypass valve open half a turn. It is adjusted by turning the bypass screw (**a** diag. **60**) . Turn the screw clockwise to close the bypass.
When using thermostatic radiator valves (TRV's), a separate adjustable bypass of 15 mm minimum diameter must be fitted between the flow and return of the heating circuit. Any bypass must be fitted before system controls.

If desired the pump can be made to run when the burner is lit and will continue to run after burner extinction. This can be useful on certain installations that requireconstant heating water circulation.
To change the pump operation to continuous, it is necessary to place the electrical jumper on the PCB in the "C" position, see **diagram 61**.

Diagram. 60

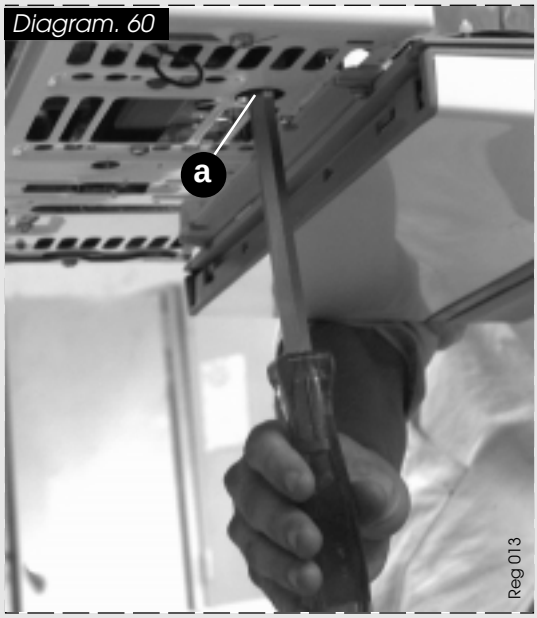

Diagram. 61

As the boiler is supplied, the pump operation is conventional, that is, the pump will operate when the burner is lit during a central heating demand.

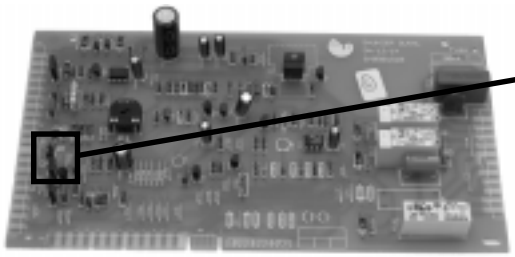

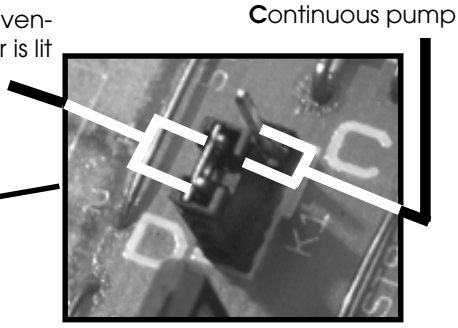

CHANGING GAS TYPE

Should it become necessary to change the gas type, a modification kit composing injectors, pilot assembly and factory set gas valve will be required. This modification can only be carried out by an authorized and suitable qualified engineer.

Saunier Duval

102740 D 08/96